STRATA PLAN OF LOT 1 EXCEPT:
FIRSTLY; PHASE ONE STRATA PLAN LMS3201
SECONDLY; PHASE TWO STRATA PLAN LMS3201
ALL OF SECTION 23 TOWNSHIP 2
N.W.D. PLAN LMP29951

CITY OF SURREY

B.C.G.S. 92G.017

0 50 100

SCALE 1 : 1250 DISTANCES ARE METRIC

STRATA PLAN LMS3201
PHASE 3

DEPOSITED AND REGISTERED IN THE LAND TITLE OFFICE AT NEW WESTMINSTER B.C. THIS 22 DAY OF February 1999

DEPUTY REGISTRAR

BN 42531 - BN42536

CIVIC ADDRESS:
15350 SEQUOIA DRIVE
SURREY, B.C.

Pg.54

INTEGRATED SURVEY AREA No.1 SURREY
THIS PLAN SHOWS GROUND - LEVEL MEASURED DISTANCES PRIOR TO COMPUTATION OF UTM CO-ORDINATES MULTIPLY BY COMBINED FACTOR 0.9995994. NAD83 (CSRS)

LEGEND:

GRID BEARINGS ARE DERIVED FROM OBSERVATIONS BETWEEN CONTROL MONUMENTS 5429 AND 5264

- ● DENOTES CONTROL MONUMENT FOUND
- • DENOTES IRON POST FOUND
- SL. DENOTES STRATA LOT
- PT. DENOTES PART
- T DENOTES TOTAL
- m2 DENOTES SQUARE METRES
- © DENOTES COMMON PROPERTY
- D-19 DENOTES DECK BEING LIMITED COMMON PROPERTY FOR EXCLUSIVE USE OF STRATA LOT 19 (TYPICAL)
- DR-20 DENOTES DRIVEWAY BEING LIMITED COMMON PROPERTY FOR EXCLUSIVE USE OF STRATA LOT 20 (TYPICAL)
- G DENOTES GARAGE

NOTE: GARAGE AND BASEMENT ARE NOT INCLUDED IN UNIT ENTITLEMENT

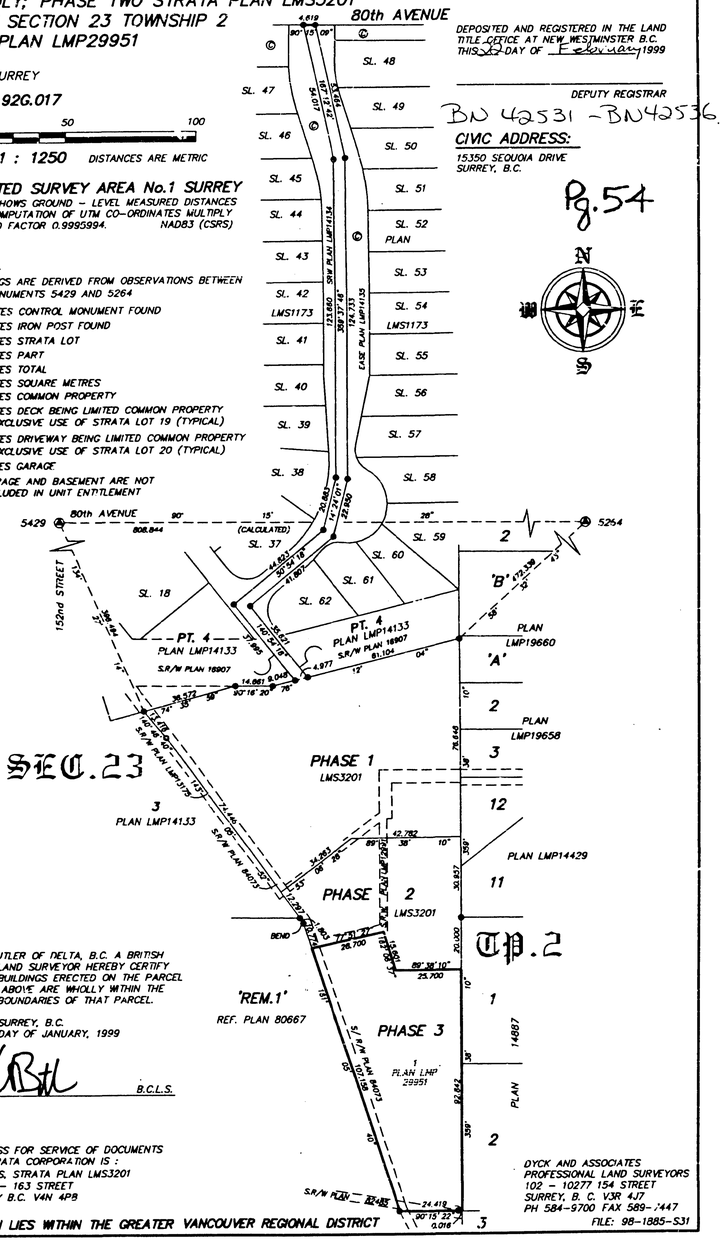

I GRANT BUTLER OF DELTA, B.C. A BRITISH COLUMBIA LAND SURVEYOR HEREBY CERTIFY THAT THE BUILDINGS ERECTED ON THE PARCEL DESCRIBED ABOVE ARE WHOLLY WITHIN THE EXTERNAL BOUNDARIES OF THAT PARCEL.

DATED AT SURREY, B.C.
THIS 27th DAY OF JANUARY, 1999

B.C.L.S.

THE ADDRESS FOR SERVICE OF DOCUMENTS OF THE STRATA CORPORATION IS :
THE OWNERS, STRATA PLAN LMS3201
c/o 11302 - 163 STREET
SURREY B.C. V4N 4P8

DYCK AND ASSOCIATES
PROFESSIONAL LAND SURVEYORS
102 - 10277 154 STREET
SURREY, B. C. V3R 4J7
PH 584-9700 FAX 589-7447

FILE: 98-1885-S31

THIS PLAN LIES WITHIN THE GREATER VANCOUVER REGIONAL DISTRICT

BUILDING LOCATIONS

0 25 50

SCALE 1 : 500 DISTANCES ARE METRIC

STRATA PLAN LMS3201
PHASE 3

Pg.54

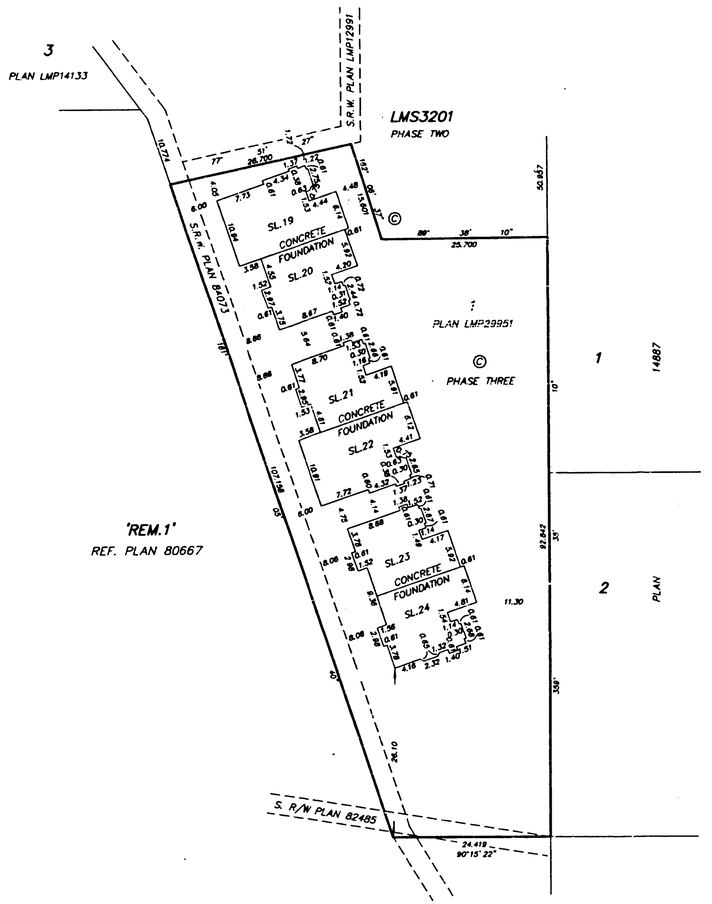

JANUARY 27, 1999
FILE: 98-1885-S32

STRATA PLAN LMS3201
PHASE 3

CONDOMINIUM ACT

LOT No.	SHEET No.	FORM 1 SCHEDULE OF UNIT ENTITLEMENT: UNIT ENTITLEMENT	FORM 2 SCHEDULE OF INTEREST UPON DESTRUCTION: INTEREST UPON DESTRUCTION
19	4	189	3498
20	4	194	3398
21	5	194	3398
22	5	189	3498
23	6	194	3398
24	6	194	3398
AGGREGATE		1154	20588

OWNERS

LIN CIN DEVELOPMENT LTD.
(INCORPORATION No. 547358)

Name LIN, CHIEN-CHUNG
Authorized Signatory

Name
Authorized Signatory

WITNESS AS TO BOTH SIGNATURES
Name JON VAN GERAL
ADDRESS 16238-28 AVE
SURREY BC
PROJECT MANAGER
OCCUPATION

MORTGAGEE:

THE NORTH WEST LIFE ASSURANCE COMPANY OF CANADA
(INCORPORATION No. 33334-A)

Name D. A. CARROTHERS
Authorized Signatory

Name D. R. FRANCIS
Authorized Signatory

WITNESS AS TO BOTH SIGNATURES
Name N. H. BROWN
ADDRESS 1188 W. GEORGIA #1900
VANCOUVER, B.C.
SENIOR DIRECTOR, MORTGAGES
OCCUPATION

APPROVED UNDER THE CONDOMINIUM ACT AS TO PHASE THREE OF A 3 PHASE STRATA PLAN
DATED THIS 11th DAY OF February 1999

APPROVING OFFICER
CITY OF SURREY

I, THE UNDERSIGNED DO SOLEMNLY DECLARE THAT
1) I, THE UNDERSIGNED AM THE DULY AUTHORIZED AGENT OF THE OWNER - DEVELOPER
2) THE STRATA PLAN IS ENTIRELY FOR RESIDENTIAL USE
I MAKE THIS SOLEMN DECLARATION CONSCIENTIOUSLY BELIEVING IT TO BE TRUE AND KNOWING THAT IT IS OF THE SAME FORCE AND EFFECT AS IF MADE UNDER OATH

DECLARED BEFORE ME AT SURREY B.C.
THIS 16 DAY OF FEBRUARY 1999

A COMMISSIONER FOR TAKING AFFIDAVITS WITHIN THE PROVINCE OF BRITISH COLUMBIA

ACCEPTED AS TO FORMS 1 AND 2
THIS 19 DAY February 1999

SUPERINTENDENT OF REAL ESTATE

THE CITY OF SURREY, THE REGISTERED OWNER OF THE COVENANTS AC243265 AD34721, BG465521, BG465525, BG465593, AND BK290527 HEREBY CONSENT TO THE DEPOSIT OF THIS PLAN AUTHORIZED SIGNATURES

MAYOR

CLERK

I GRANT BUTLER OF DELTA, B.C. A BRITISH COLUMBIA LAND SURVEYOR HEREBY CERTIFY THAT THE BUILDINGS SHOWN IN THIS STRATA PLAN HAVE NOT AS OF THE 27th DAY OF JANUARY, 1999 BEEN PREVIOUSLY OCCUPIED

DATED AT SURREY, B.C.
THIS 27th DAY OF JANUARY, 1999

B.C.L.S.

FILE: 98-1885-S31

FLOOR PLANS AND SECTION
STRATA LOTS 19 AND 20

STRATA PLAN LMS3201
PHASE 3

0 5 10 15 20
SCALE 1 : 250 DISTANCES ARE METRIC

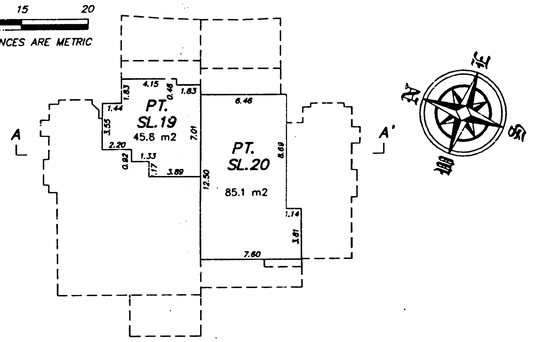

UPPER FLOOR

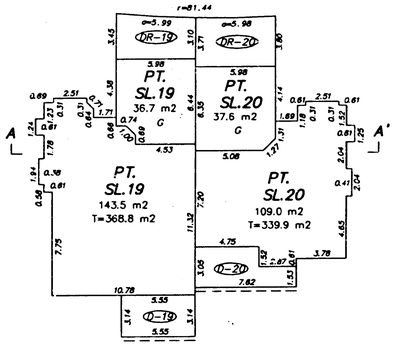

MAIN FLOOR

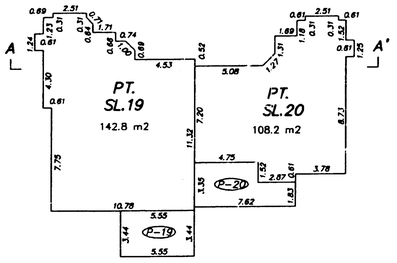

BASEMENT

UPPER FLOOR		
MAIN FLOOR	SL. 19	SL. 20
BASEMENT		

SECTION A – A'

JANUARY 27, 1999
FILE: 98-1885-S33

FLOOR PLANS AND SECTION
STRATA LOTS 21 AND 22

STRATA PLAN LMS3201
PHASE 3

0 5 10 15 20
SCALE 1 : 250 DISTANCES ARE METRIC

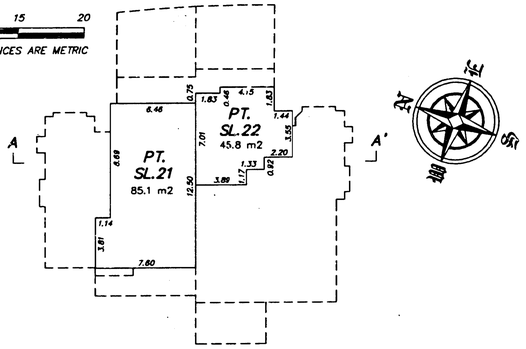

UPPER FLOOR

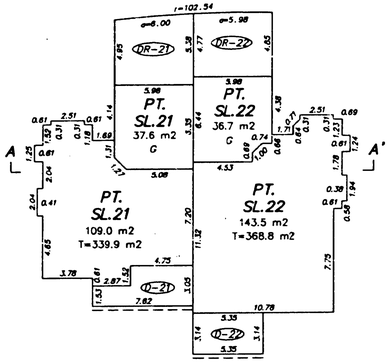

MAIN FLOOR

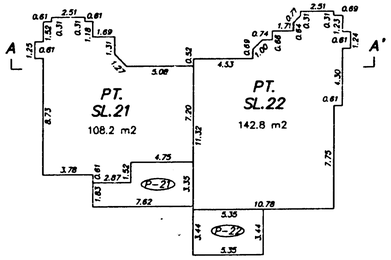

BASEMENT

UPPER FLOOR		
MAIN FLOOR	SL. 21	SL. 22
BASEMENT		

SECTION A – A'

JANUARY 27, 1999
FILE: 98-1885-S33

FLOOR PLANS AND SECTIONS
STRATA LOTS 23 AND 24

STRATA PLAN LMS3201
PHASE 3

0 5 10 15
SCALE 1 : 250 DISTANCES ARE METRIC

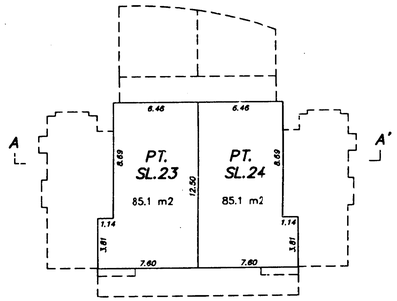

UPPER FLOOR

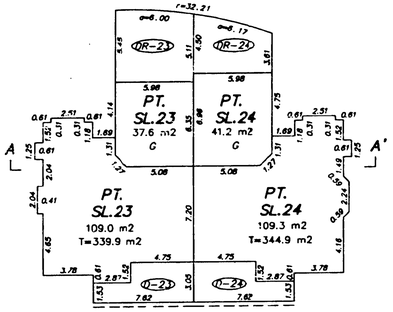

MAIN FLOOR

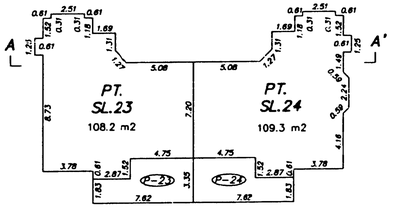

BASEMENT

UPPER FLOOR		
MAIN FLOOR	SL. 23	SL. 24
BASEMENT		

SECTION A – A'

JANUARY 27, 1999
FILE: 98-1885-S33