STRATA PLAN OF LOT 1, EXCEPT STRATA PLAN N.W. 3222 (PHASE 1) SEC.7, TP.2, N.W.D., PLAN 82402

STRATA PLAN N.W.3222
PHASE 2 REF. # BD141165 to BD141187

DEPOSITED AND REGISTERED IN THE LAND TITLE OFFICE AT NEW WESTMINSTER, B.C.
THIS 3rd DAY OF MAY, 1990.

ASSISTANT ~~DEPUTY~~ REGISTRAR

THIS PLAN LIES WITHIN THE GREATER VANCOUVER REGIONAL DISTRICT

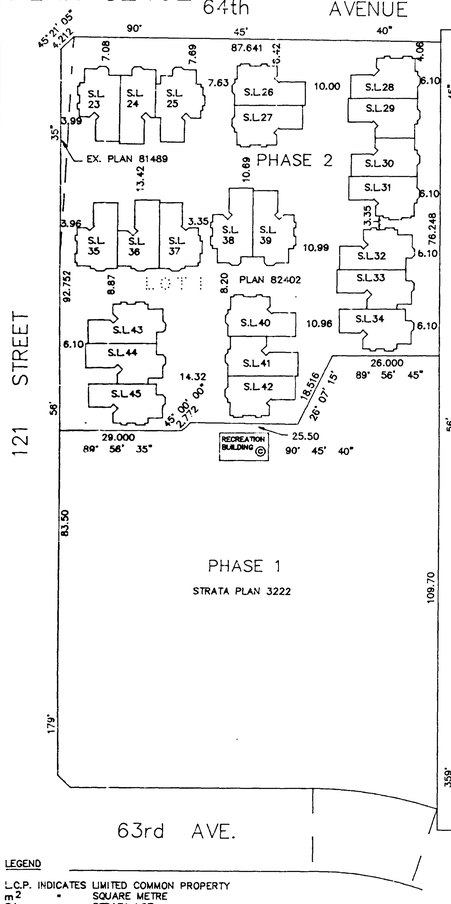

SCALE–1:750
0 5 10 20 30 40 50
ALL DISTANCES IN METRES

MUNICIPALITY OF SURREY

CIVIC ADDRESS
12114–64 th AVENUE

REM. E 1/2
5

PLAN 2365

THE ADDRESS FOR SERVICE OF DOCUMENTS ON THE STRATA CORPORATION IS: THE OWNER'S STRATA PLAN NW 3222
c/o ORECK, CHERNOFF AND TICK
BARRISTERS AND SOLICITORS
:800 – 701 W. GEORGIA ST.
VANCOUVER, B.C.

I, R. J. ESSON OF THE CITY OF WHITE ROCK BRITISH COLUMBIA LAND SURVEYOR, HEREBY CERTIFY THAT THE BUILDING ERECTED ON THE PARCEL DESCRIBED ABOVE IS WHOLLY WITHIN THE EXTERNAL BOUNDARIES OF THAT PARCEL

R. J. Esson B. C. L. S.

DATED AT WHITE ROCK, B.C.
THIS 3rd DAY OF May, 1990.

LEGEND

L.C.P.	INDICATES	LIMITED COMMON PROPERTY
m^2	-	SQUARE METRE
S.L.	-	STRATA LOT
PT.	-	PART
©	-	COMMON PROPERTY
D	-	DECK
P	-	PATIO
S	-	STAIRS
H	-	HALL
ELEC.	-	ELECTRICAL ROOM
O.T.B.	-	OPEN TO BELOW
G	-	GARAGE

ALL STRATA LOT ANGLES ARE 45° OR 90° UNLESS OTHERWISE NOTED.

14-326.M3

STRATA PLAN NW 3222
PHASE 2

NEW DEVELOPMENT CERTIFICATE
I, R.J. ESSON, A BRITISH COLUMBIA LAND SURVEYOR, HEREBY CERTIFY THAT THE BUILDINGS SHOWN IN THIS STRATA PLAN HAVE NOT, AS OF THE 2nd DAY OF May, 1990, BEEN PREVIOUSLY OCCUPIED. DATED AT WHITE ROCK, BRITISH COLUMBIA, THIS 3rd DAY OF May, 1990.

R. J. Esson B. C. L. S.

SIGNATURES

STATUTORY DECLARATION

WE THE UNDERSIGNED DO SOLEMNLY DECLARE THAT
(1) WE THE UNDERSIGNED ARE THE OWNER DEVELOPER
(2) THE STRATA PLAN IS ENTIRELY FOR RESIDENTIAL USE
WE MAKE THIS SOLEMN DECLARATION CONSCIENTIOUSLY BELIEVING IT TO BE TRUE AND KNOWING THAT IT IS OF THE SAME FORCE AND EFFECT AS IF MADE UNDER OATH

Witness
Stephen Tick
Lawyer
1800-701 West Georgia street
Van., B.C.

OWNER
FOREST RIDGE ESTATES LTD.

AUTHORIZED SIGNATORY

AUTHORIZED SIGNATORY

DECLARED BEFORE ME THIS 4 DAY OF MAY, 1990.

A COMMISSIONER FOR TAKING AFFIDAVITS WITHIN THE PROVINCE OF BRITISH COLUMBIA.

MORTGAGEE:
CITIBANK CANADA by its authorized signatory

~~AUTHORIZED SIGNATORY~~ KENNETH G. ISARD

AUTHORIZED SIGNATORY

Witness: H. Dobolan, Sr. Associate
3200, 666 Burrard St.
Vancouver, B.C.

ACCEPTED AS TO FORMS 1,2 AND 3
THIS 28 DAY OF May, 1990.

SUPERINTENDENT OF REAL ESTATE

APPROVED AS PHASE 2 OF A 2 PHASE STRATA PLAN UNDER THE CONDOMINIUM ACT DATED THIS 16th DAY OF May, 1990.

APPROVING OFFICER FOR THE CORPORATION OF THE DISTRICT OF SURREY.

CONDOMINIUM ACT

LOT NUMBER	SHEET NUMBER	FORM 1 SCHEDULE OF UNIT ENTITLEMENT	FORM 2 SCHEDULE OF INTEREST UPON DESTRUCTION	FORM 3 SCHEDULE OF VOTING RIGHTS
		UNIT ENTITLEMENT	INTEREST UPON DESTRUCTION	NUMBER OF VOTES
23	3,4	184	178	
24	3,4	184	176	
25	3,4	185	178	
26	5	177	173	
27	5	178	173	
28	6,7	174	172	
29	6,7	174	170	
30	6,7	174	170	
31	6,7	174	172	
32	8,9	185	178	
33	8,9	184	176	
34	8,9	185	178	
35	10,11	178	173	
36	10,11	178	172	
37	10,11	178	173	
38	12	185	178	
39	12	186	178	
40	13,14	174	172	
41	13,14	174	170	
42	13,14	174	172	
43	15,16	185	178	
44	15,16	184	176	
45	15,16	185	178	
AGGREGATE	PHASE 2	4139	1014	
AGGREGATE	PHASE 1	3866	3802	
TOTAL AGGREGATE		8005	7816	

R.J.E.
B.C.L.S.
DATED THIS 3rd DAY OF May, 1990.

FLOOR PLANS

SCALE 1:125
0 1 2 3 4 5
ALL DISTANCES IN METRES

STRATA PLAN NW 3222
PHASE 2

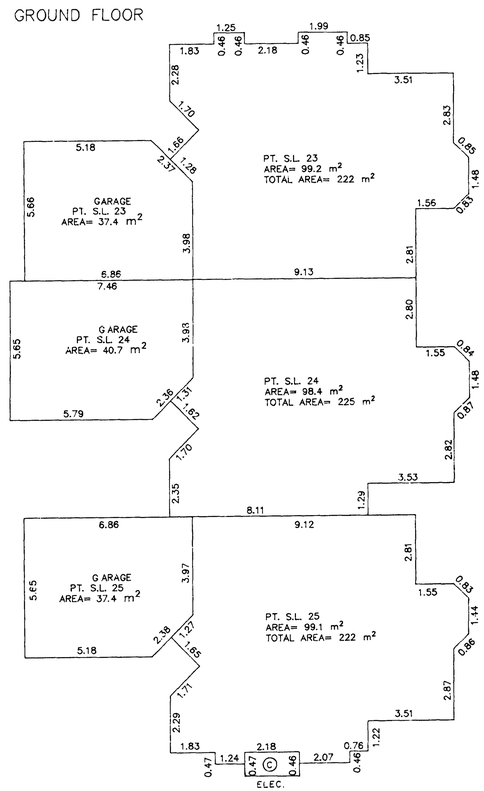

R.J.E.
B.C.L.S.
DATED THIS 3rd DAY OF May 1990.

FLOOR PLANS

SCALE 1:125

0 1 2 3 4 5

ALL DISTANCES IN METRES

STRATA PLAN NW3222

PHASE 2

SECOND FLOOR

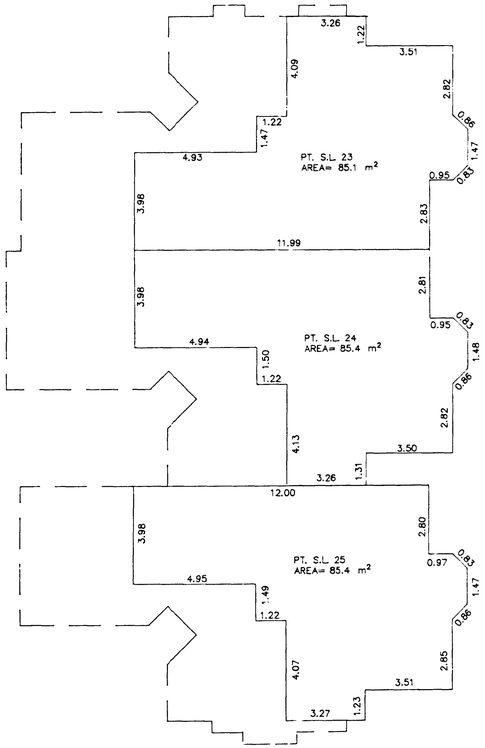

R.J.E.
B.C.L.S.

DATED THIS 3rd DAY OF May, 1990.

FLOOR PLANS

SCALE 1:125

0 1 2 3 4 5

ALL DISTANCES IN METRES

STRATA PLAN NW3222

PHASE 2

GROUND FLOOR

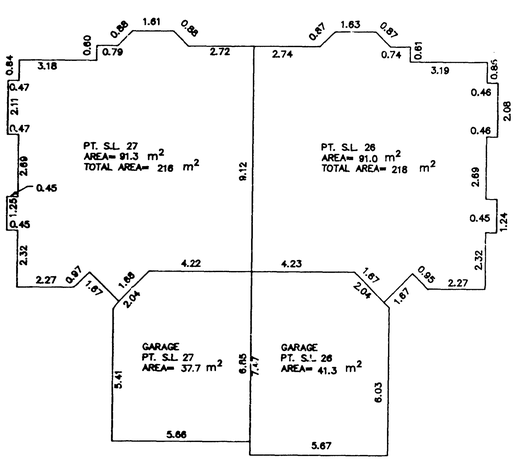

SECOND FLOOR

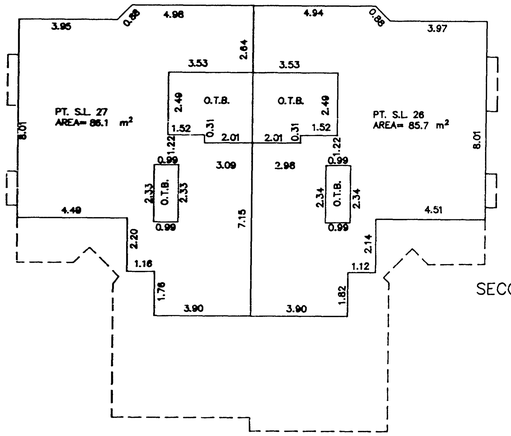

R.J.E.
B.C.L.S.

DATED THIS 3rd DAY OF May, 1990.

FLOOR PLANS

SCALE 1:125

0 1 2 3 4 5

ALL DISTANCES IN METRES

STRATA PLAN NW3222

PHASE 2

GROUND FLOOR

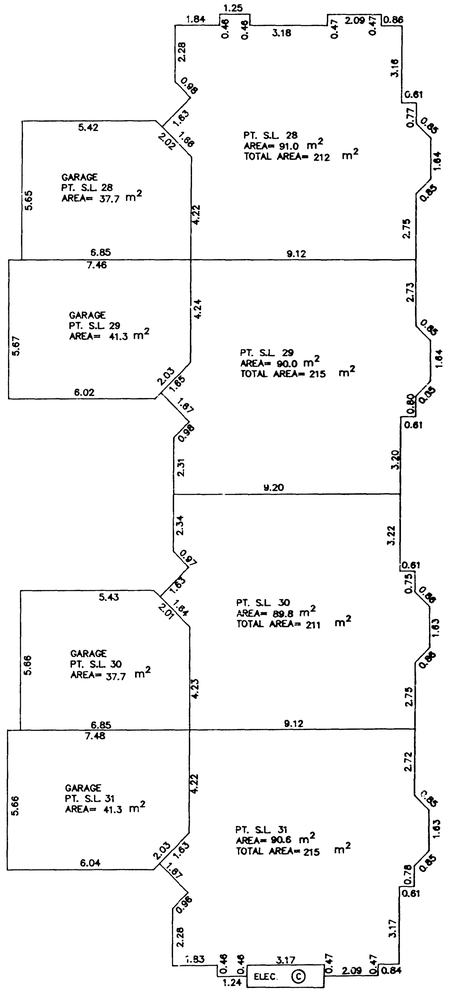

R.J.E.
B.C.L.S.

DATED THIS 3rd DAY OF May, 1990.

COMPUTER 9162ST7

SHEET 7 OF 17 SHEETS

FLOOR PLANS

SCALE 1:125

0 1 2 3 4 5

ALL DISTANCES IN METRES

N

SECOND FLOOR

STRATA PLAN NW3222

PHASE 2

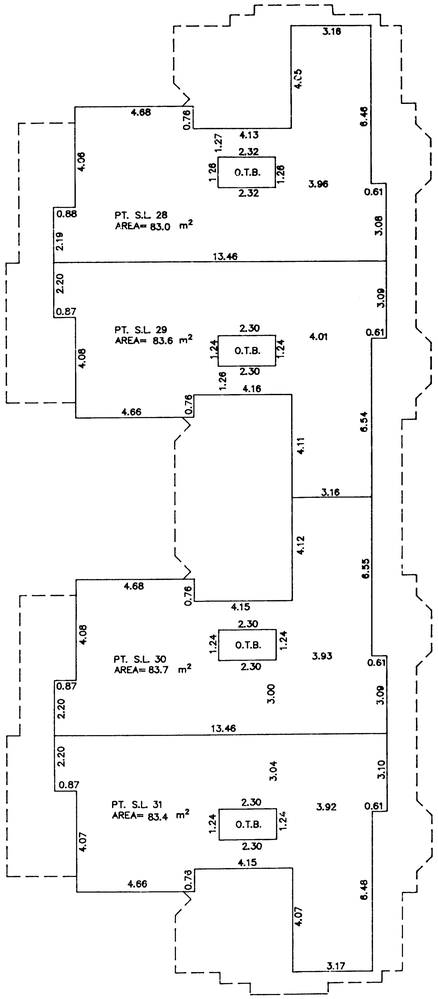

R.J.E.

DATED THIS 3rd DAY OF May, 1990.

B.C.L.S.

COMPUTER 9162ST8

SHEET 8 OF 17 SHEETS

FLOOR PLANS

SCALE 1:125

0 1 2 3 4 5

ALL DISTANCES IN METRES

N

GROUND FLOOR

STRATA PLAN NW3222

PHASE 2

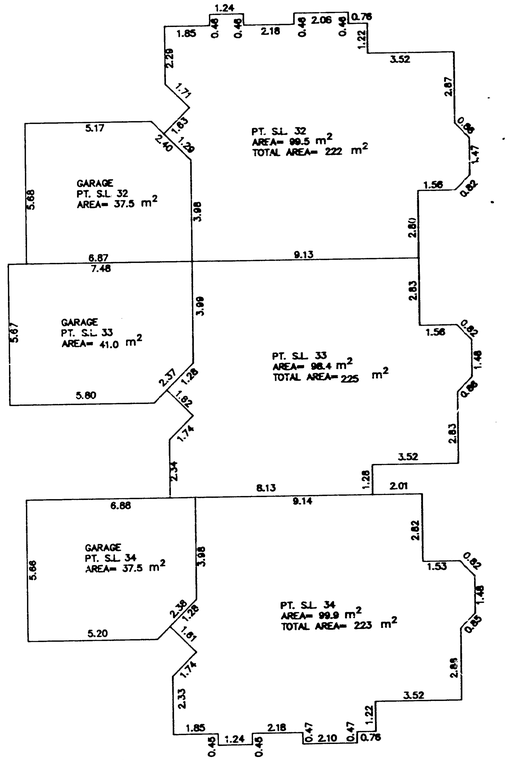

R.J.E.

DATED THIS 3rd DAY OF May, 1990.

B.C.L.S.

COMPUTER 9162ST9

SHEET 9 OF 17 SHEETS

FLOOR PLANS

SCALE 1:125

0 1 2 3 4 5

ALL DISTANCES IN METRES

N

SECOND FLOOR

STRATA PLAN NW3222

PHASE 2

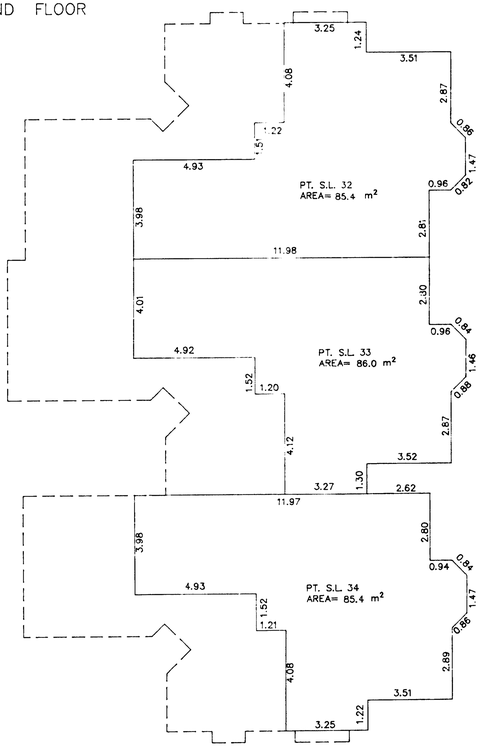

R.J.E.

DATED THIS 3rd DAY OF May, 1990.

B.C.L.S.

FLOOR PLANS

SCALE 1:125

0 1 2 3 4 5

ALL DISTANCES IN METRES

STRATA PLAN NW3222

PHASE 2

GROUND FLOOR

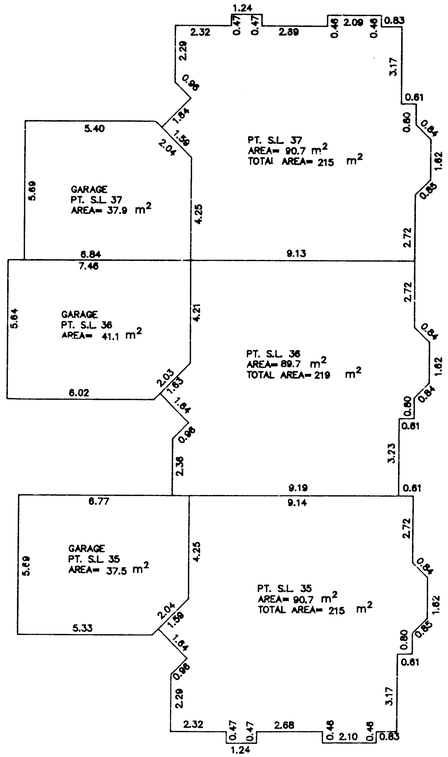

R.J.E.
B.C.L.S.

DATED THIS 3rd DAY OF May, 1990.

FLOOR PLANS

SCALE 1:125

0 1 2 3 4 5

ALL DISTANCES IN METRES

STRATA PLAN NW3222

PHASE 2

SECOND FLOOR

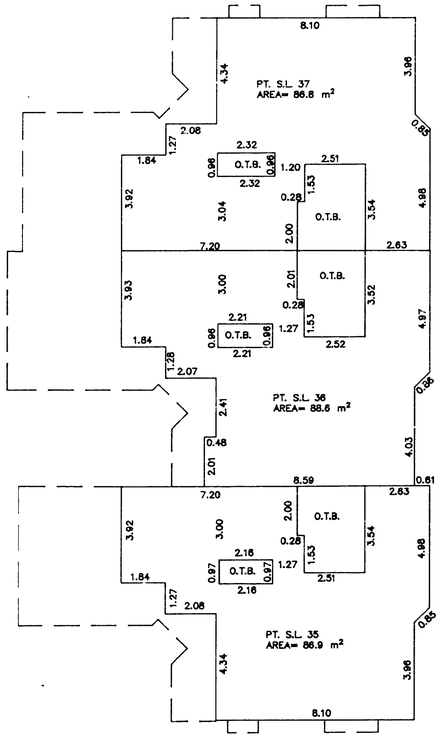

R.J.E.
B.C.L.S.

DATED THIS 3rd DAY OF May, 1990.

FLOOR PLANS

SCALE 1:125

0 1 2 3 4 5

ALL DISTANCES IN METRES

STRATA PLAN NW3222

PHASE 2

GROUND FLOOR

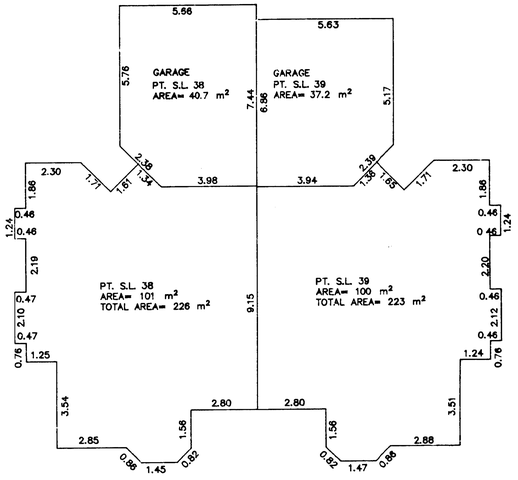

SECOND FLOOR

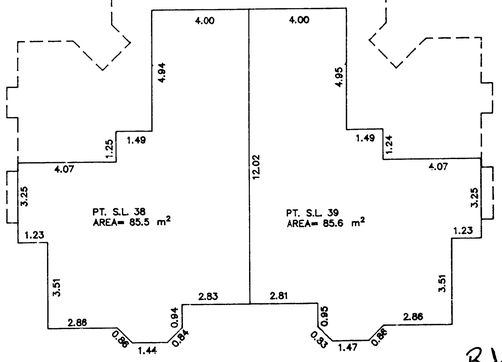

R.J.E.
B.C.L.S.

DATED THIS 3rd DAY OF May, 1990.

FLOOR PLANS

SCALE 1:125

0 1 2 3 4 5

ALL DISTANCES IN METRES

N

STRATA PLAN NW3222

PHASE 2

GROUND FLOOR

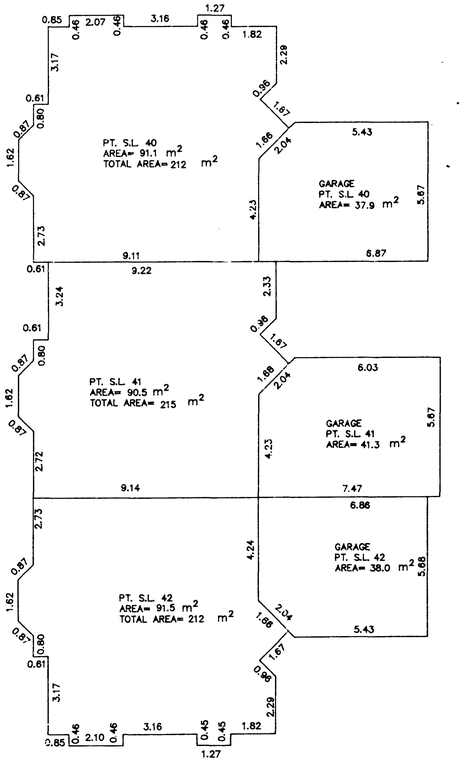

R.J.E.

B.C.L.S.

DATED THIS 3rd DAY OF May, 1990.

FLOOR PLANS

SCALE 1:125

0 1 2 3 4 5

ALL DISTANCES IN METRES

N

STRATA PLAN NW3222

PHASE 2

SECOND FLOOR

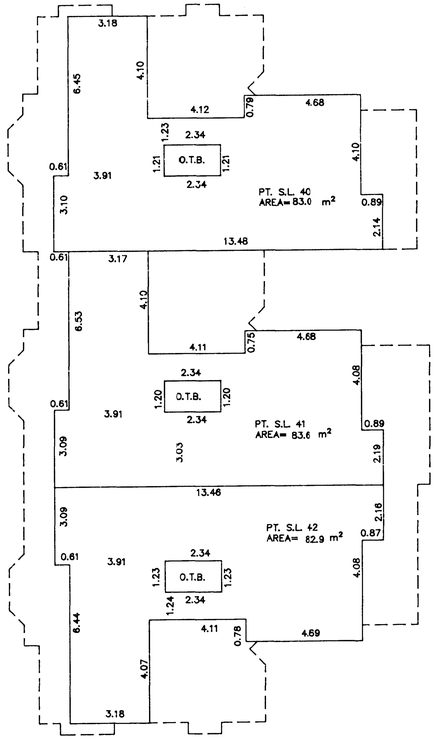

R.J.E.

B.C.L.S.

DATED THIS 3rd DAY OF May, 1990.

FLOOR PLANS

SCALE 1:125

0 1 2 3 4 5

ALL DISTANCES IN METRES

N

STRATA PLAN NW3222

PHASE 2

GROUND FLOOR

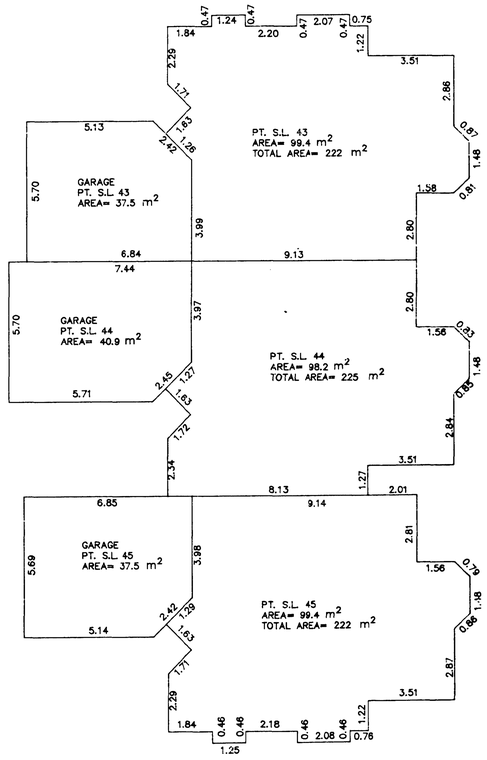

R.J.E.

B.C.L.S.

DATED THIS 3rd DAY OF May, 1990.

FLOOR PLANS

SCALE 1:125

0 1 2 3 4 5

ALL DISTANCES IN METRES

STRATA PLAN NW3222

PHASE 2

N

SECOND FLOOR

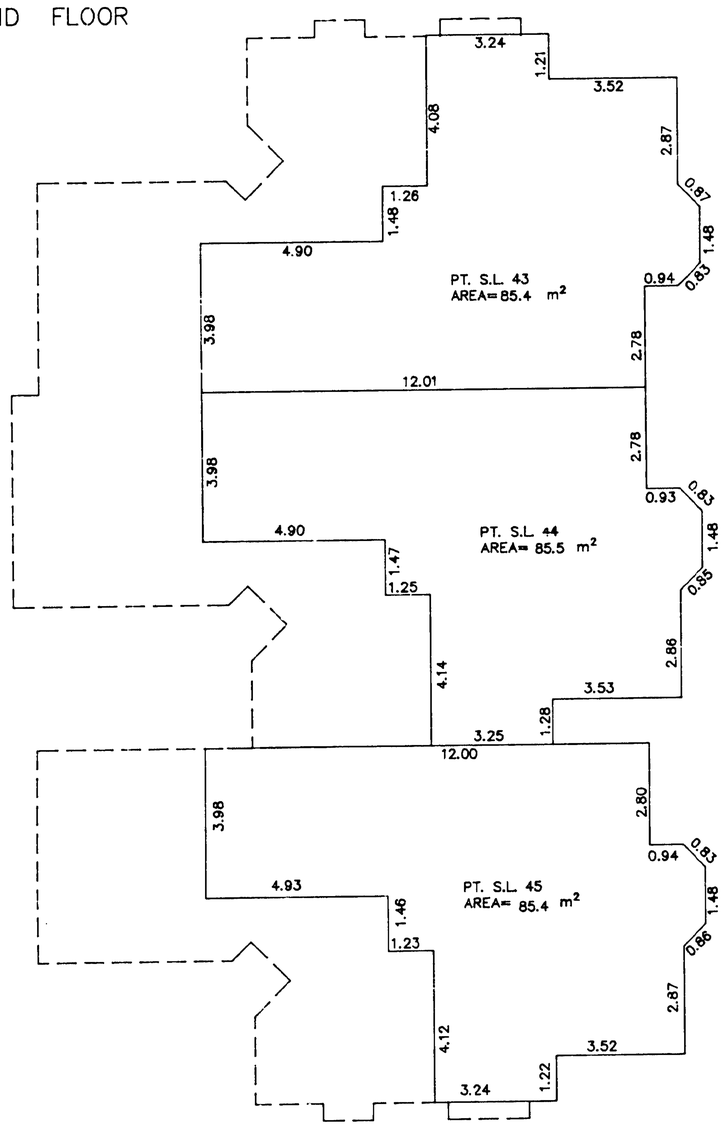

R.J.E.

DATED THIS 3rd DAY OF May, 1990.

B.C.L.S.

SECTIONS

SCALE 1: 250

0 5 10 20

ALL DISTANCES IN METRES

STRATA PLAN NW3222

PHASE 2

TYPICAL SECTION FOR S.L. 23, 24, 25, 32, 33, 34, 38, 39, 43, 44, 45

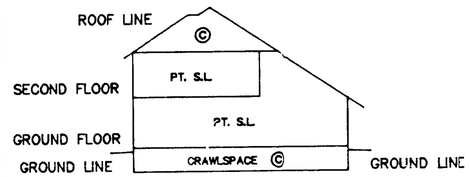

TYPICAL SECTION

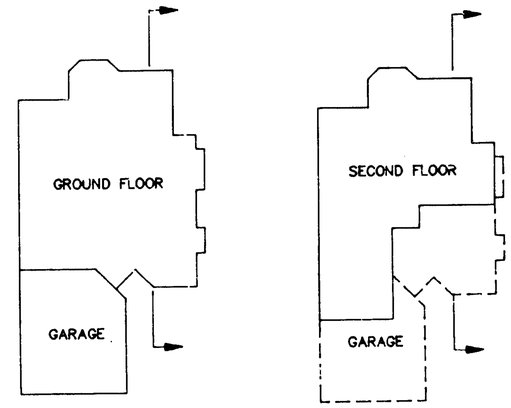

TYPICAL SECTION FOR S.L. 28, 29, 30, 31, 40, 41, 42

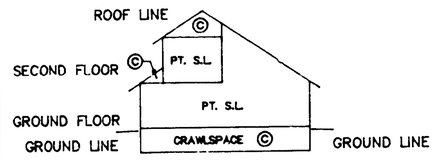

TYPICAL SECTION

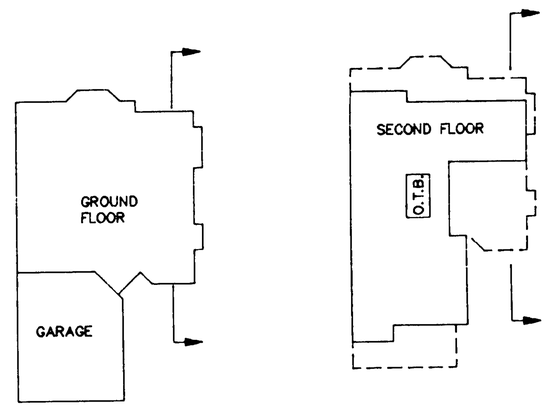

TYPICAL SECTION FOR S.L. 26, 27, 35, 36, 37

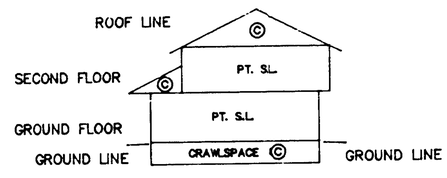

TYPICAL SECTION

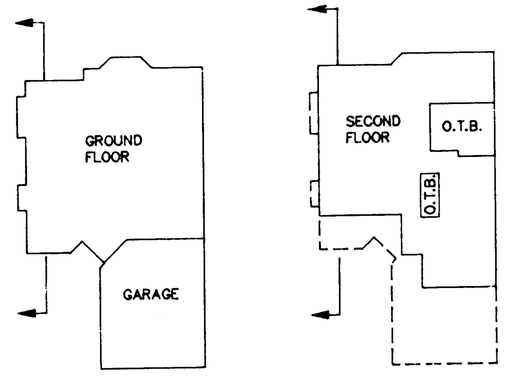

R.J.E.

DATED THIS 3rd DAY OF May, 1990.

B.C.L.S.