STRATA PLAN OF PART OF LOT 1, SECTION 15, TOWNSHIP 2, NEW WESTMINSTER DISTRICT, PLAN LMP43488

B.C.G.S. 92G.007

"CITY OF SURREY"

STRATA PLAN LMS 4358

PHASE 1

DEPOSITED AND REGISTERED IN THE LAND TITLE OFFICE AT NEW WESTMINSTER, B.C. THIS 16 DAY OF FEB, 2001.

ASSISTANT DEPUTY-REGISTRAR

REF. NO. BR 35437-452

Pg. 63

SCALE 1: 750

10 0 10 20 30 40

ALL DISTANCES ARE IN METRES

CIVIC ADDRESS
15100-66 A AVENUE
SURREY, B.C.
V3S 2A6

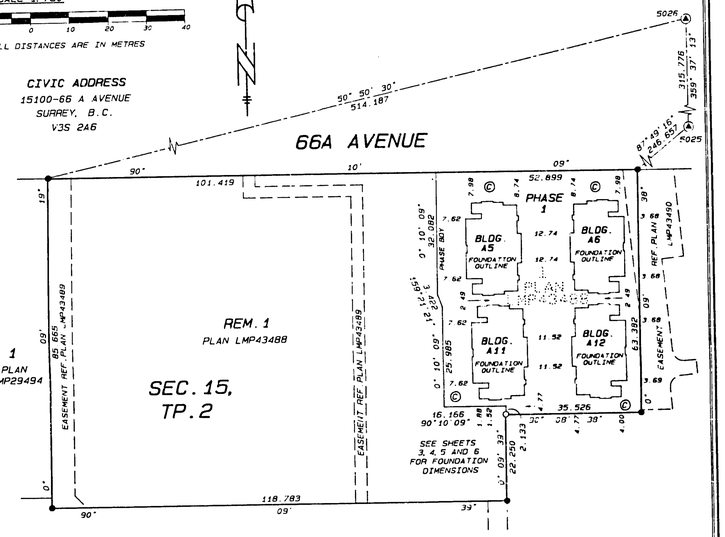

INTEGRATED SURVEY AREA NO. 1
CITY OF SURREY

THIS PLAN SHOWS GROUND-LEVEL MEASURED DISTANCES. PRIOR TO COMPUTATION OF U.T.M. CO-ORDINATES MULTIPLY BY COMBINED FACTOR 0.9996032 NAD83 (CSRS).

LEGEND

GRID BEARINGS ARE DERIVED FROM OLD CONTROL MONUMENTS 5025 AND 5026.

- (A) DENOTES CONTROL MONUMENT FOUND
- ● DENOTES STANDARD IRON POST FOUND
- ○ DENOTES STANDARD IRON POST PLACED
- m^2 DENOTES SQUARE METRES
- (C) DENOTES COMMON PROPERTY
- S.L. DENOTES STRATA LOT
- LCP-4 (TYPICAL) DENOTES LIMITED COMMON PROPERTY FOR THE EXCLUSIVE USE OF STRATA LOT 4

NOTE:
THIS STRATA PLAN CONTAINS LIMITED COMMON PROPERTY ACCORDING TO SECTION 73 OF THE STRATA PROPERTY ACT.

I, W. PAPOVE OF COQUITLAM, A BRITISH COLUMBIA LAND SURVEYOR, HEREBY CERTIFY THAT THE BUILDINGS SHOWN ON THIS STRATA PLAN ARE WITHIN THE EXTERNAL BOUNDARIES OF THE LAND THAT IS THE SUBJECT OF THE STRATA PLAN DATED THIS 28TH DAY OF NOVEMBER, 2000.

B.C.L.S.

THIS PLAN LIES WITHIN THE GREATER VANCOUVER REGIONAL DISTRICT

PAPOVE
PROFESSIONAL
LAND SURVEYING INC.
#202 - 1070 RIDGEWAY AVENUE
COQUITLAM, B.C. V3J 1S7
TEL. 936-3737 FAX. 936-6509
FILE: 4524-1

STRATA PROPERTY ACT

STRATA PLAN LMS 4358

PHASE 1

OWNER
DEVCORP INDUSTRIES LTD.
(INC. NO. 583868)

AUTHORIZED SIGNATORY ANDREW McLAREN

AUTHORIZED SIGNATORY

WITNESS AS TO BOTH
DORWIN J. CHO
7525 King George Hwy
ADDRESS OF WITNESS
Surrey BC
Lawyer
OCCUPATION OF WITNESS

MORTGAGEE
BIBLE FELLOWSHIP HOUSING SOCIETY
(INC. NO. 15235F)

AUTHORIZED SIGNATORY KIRK DUNCAN

AUTHORIZED SIGNATORY ALEX PALMER

WITNESS AS TO BOTH ZORRET BOZLOVITCH
#106, 15140-108 AVE. SURREY, BC
ADDRESS OF WITNESS
CONSTRUCTION
OCCUPATION OF WITNESS

APPROVED AS PHASE 1 OF A 3 PHASE STRATA PLAN UNDER SECTION 224 OF THE STRATA PROPERTY ACT. THIS 9th DAY OF January, 2001

APPROVING OFFICER FOR THE CITY OF SURREY
NICHOLAS LAI

WE, THE BIBLE FELLOWSHIP HOUSING SOCIETY, OWNER OF RESTRICTIVE COVENANT BN312825, CONSENT TO THE DEPOSIT FOR REGISTRATION OF PHASE 1 STRATA PLAN LMS____.

AUTHORIZED SIGNATORY KIRK DUNCAN

AUTHORIZED SIGNATORY ALEX PALMER

MORTGAGEE
FIRST HERITAGE DELTA CREDIT UNION

AUTHORIZED SIGNATORY
KARL SMAKOWSKI
MANAGER - COMMERCIAL LENDING

AUTHORIZED SIGNATORY

WITNESS AS TO BOTH Betty Lee
32160 South Fraser Way
Abbotsford BC V2T 3X8
ADDRESS OF WITNESS
Commissioner For Taking Affidavits For British Columbia
OCCUPATION OF WITNESS

MORTGAGEE
REGAL PACIFIC MORTGAGE CORPORATION
(INC. NO. 434540)

AUTHORIZED SIGNATORY ANDREW McLAREN

AUTHORIZED SIGNATORY

WITNESS AS TO BOTH
DORWIN J. CHO
7525 King George Hwy
ADDRESS OF WITNESS
Surrey BC
Lawyer
OCCUPATION OF WITNESS

WE, THE CITY OF SURREY, OWNER OF COVENANTS BF217522, BF217526, BH635155, BH267985, BH267988, BH267994 AND BH267999, CONSENT TO THE DEPOSIT FOR REGISTRATION OF PHASE 1 STRATA PLAN LMS____.

MAYOR, Doug McCallum AUTHORIZED SIGNATORY

Acting CLERK, Margaret Jones AUTHORIZED SIGNATORY

NOVEMBER 28TH, 2000.

BUILDING DIMENSIONS

STRATA PLAN LMS 4358

PHASE 1

SCALE 1: 100

2.5 0 2.5 5

ALL DISTANCES ARE IN METRES

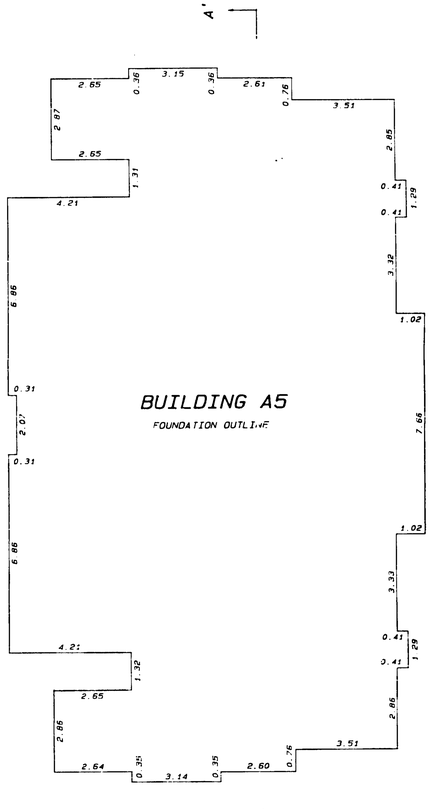

NOVEMBER 28TH, 2000.

BUILDING DIMENSIONS

STRATA PLAN LMS_4338_

PHASE 1

SCALE 1:100

2.5 0 2.5 5

ALL DISTANCES ARE IN METRES

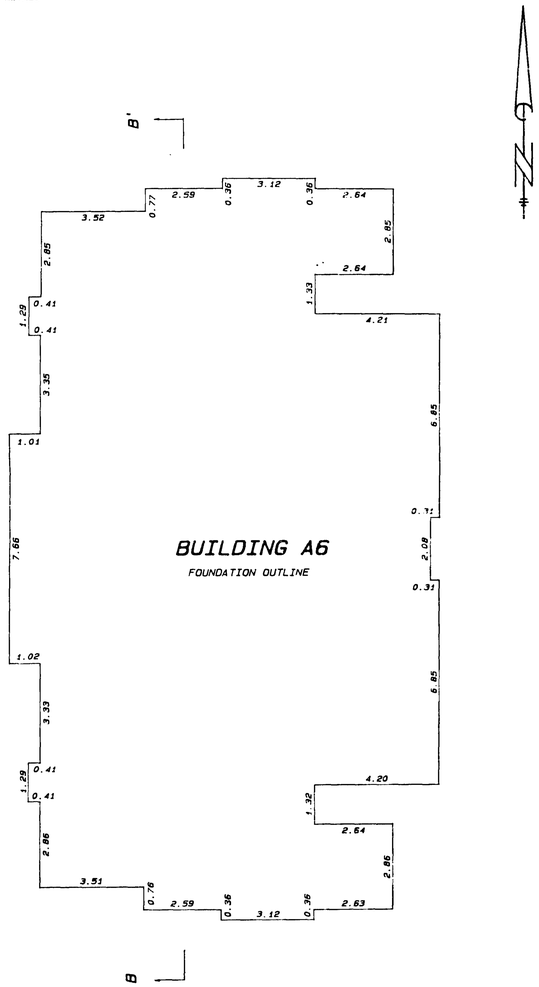

NOVEMBER 28TH, 2000.

BUILDING DIMENSIONS

STRATA PLAN LMS_4338_

PHASE 1

SCALE 1:100

2.5 0 2.5 5

ALL DISTANCES ARE IN METRES

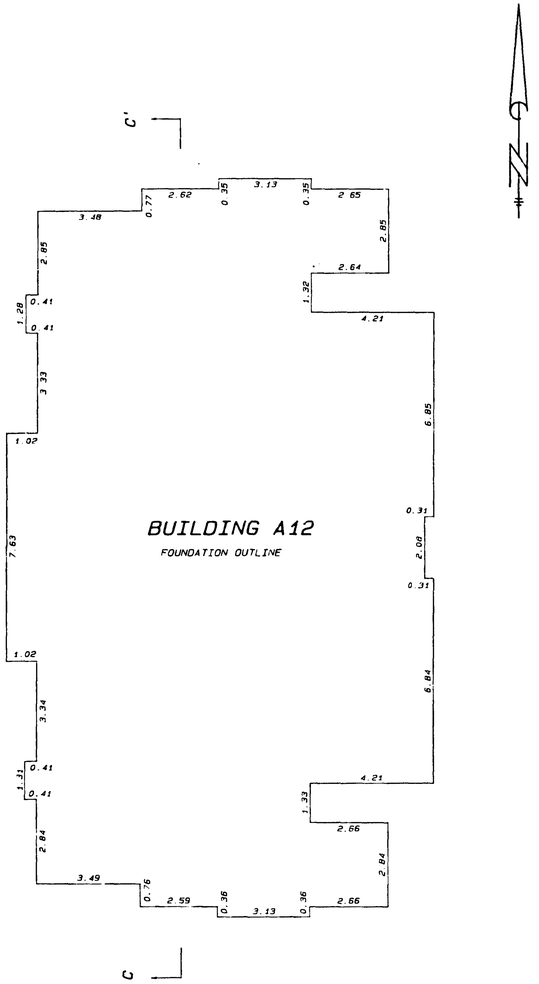

NOVEMBER 28TH, 2000.

BUILDING DIMENSIONS

STRATA PLAN LMS_4338_

PHASE 1

SCALE 1:100

2.5 0 2.5 5

ALL DISTANCES ARE IN METRES

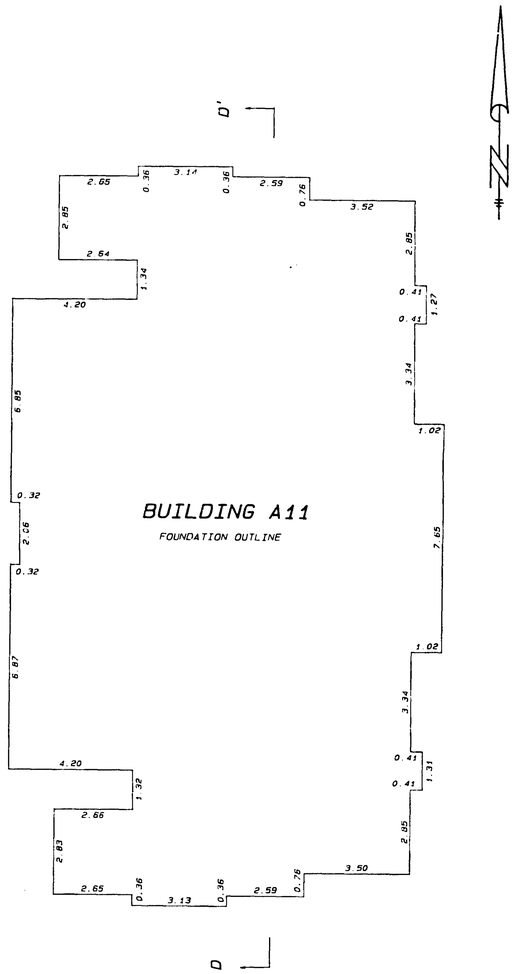

NOVEMBER 28TH, 2000.

BUILDING A5

GROUND FLOOR

STRATA PLAN LMS 4358

PHASE 1

SCALE 1: 100

2.5 0 2.5 5

ALL DISTANCES ARE IN METRES

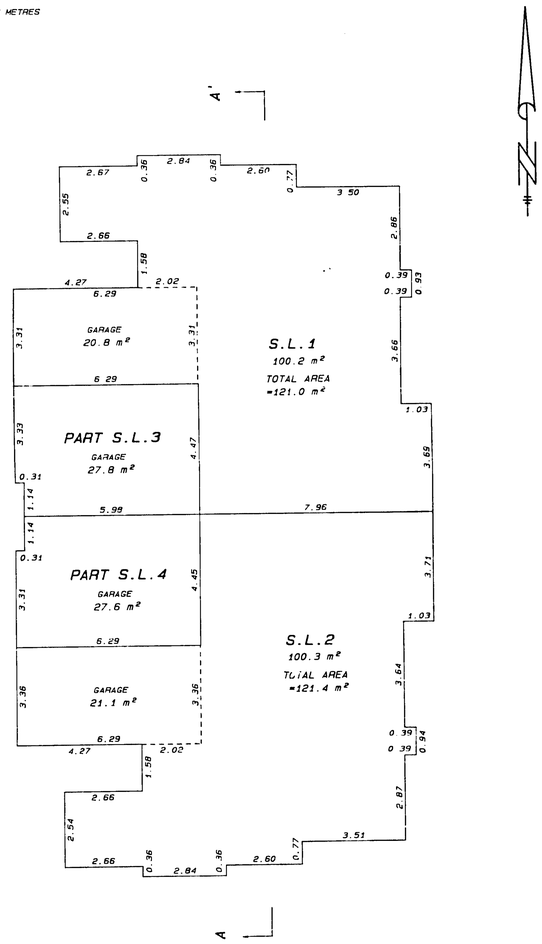

NOVEMBER 28TH, 2000.

BUILDING A5

SECOND FLOOR

STRATA PLAN LMS 4358

PHASE 1

SCALE 1: 100

2.5 0 2.5 5

ALL DISTANCES ARE IN METRES

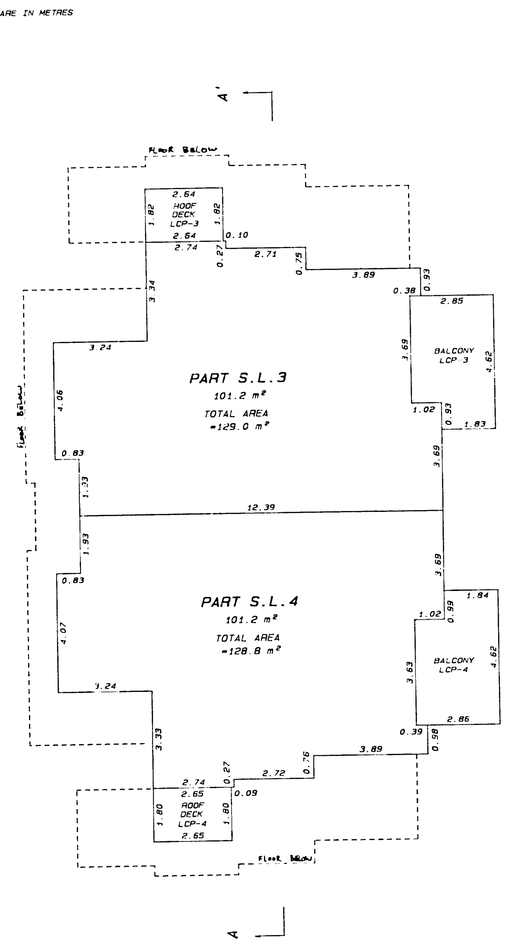

NOVEMBER 28TH, 2000.

BUILDING A6

GROUND FLOOR

STRATA PLAN LMS 4358

PHASE 1

SCALE 1: 100

2.5 0 2.5 5

ALL DISTANCES ARE IN METRES

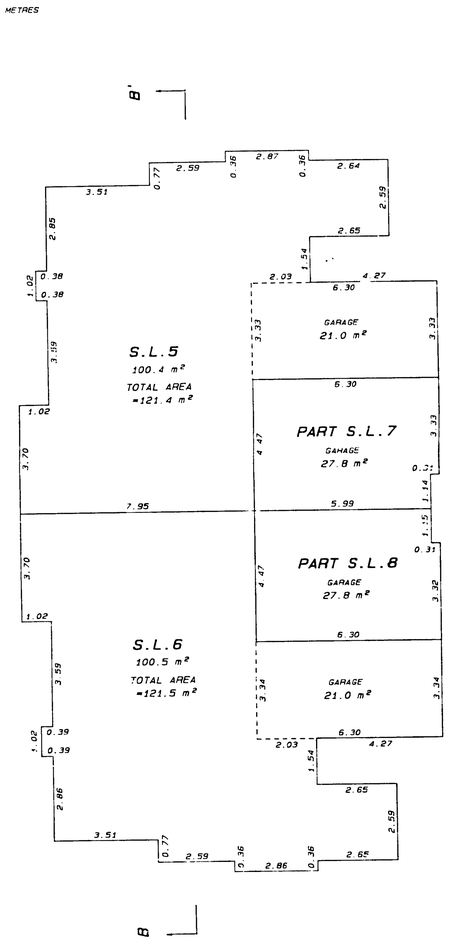

NOVEMBER 28TH, 2000.

BUILDING A6

SECOND FLOOR

STRATA PLAN LMS_4358_

PHASE 1

SCALE 1:100

2.5 0 2.5 5

ALL DISTANCES ARE IN METRES

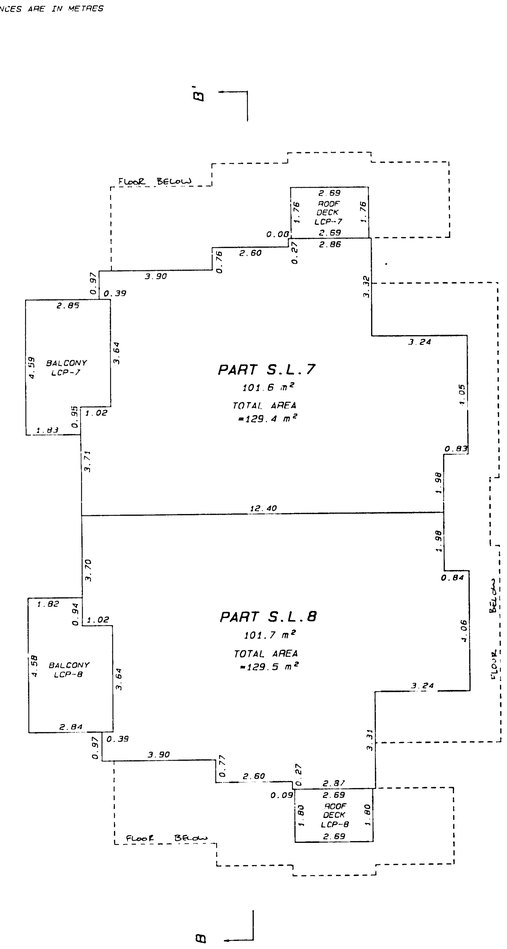

NOVEMBER 28TH, 2000.

BUILDING A12

GROUND FLOOR

STRATA PLAN LMS_4358_

PHASE 1

SCALE 1:100

2.5 0 2.5 5

ALL DISTANCES ARE IN METRES

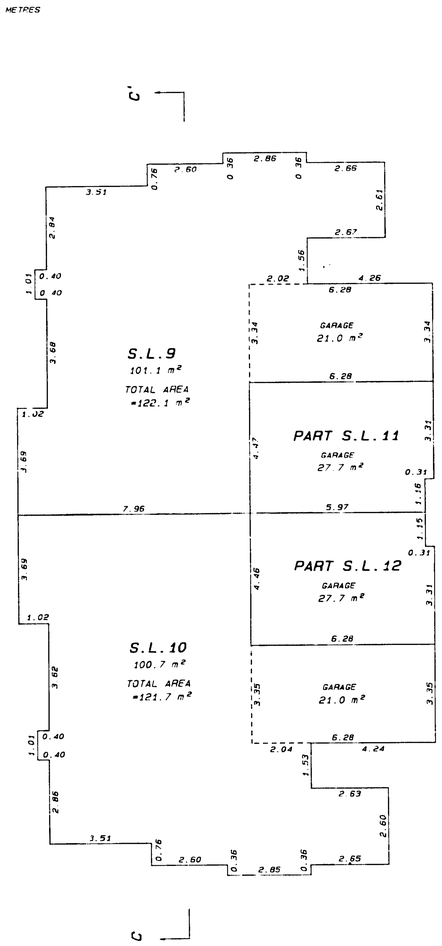

NOVEMBER 28TH, 2000.

BUILDING A12

SECOND FLOOR

STRATA PLAN LMS_4358_

PHASE 1

SCALE 1:100

2.5 0 2.5 5

ALL DISTANCES ARE IN METRES

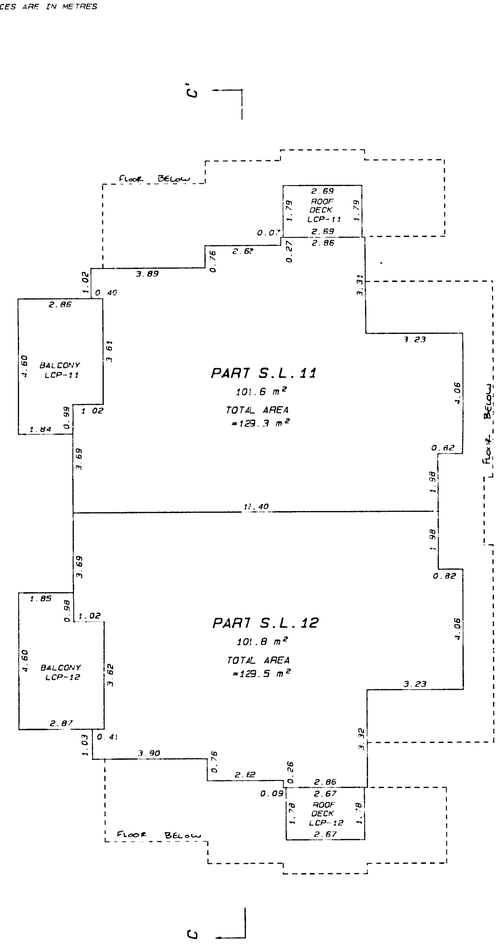

NOVEMBER 28TH, 2000.

BUILDING A11

GROUND FLOOR

STRATA PLAN LMS_4358_

PHASE 1

SCALE 1:100

2.5 0 2.5 5

ALL DISTANCES ARE IN METRES

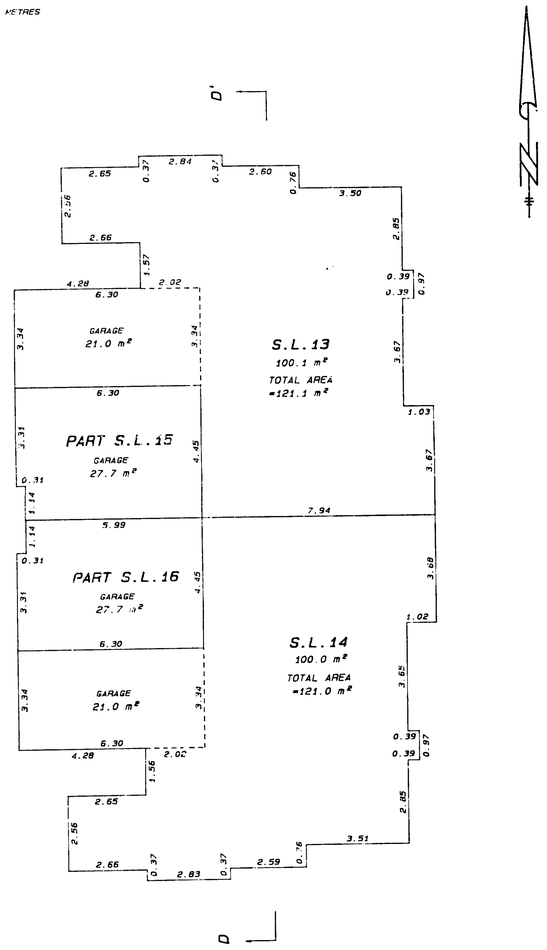

NOVEMBER 28TH, 2000.

BUILDING A11

SECOND FLOOR

STRATA PLAN LMS_4358_

PHASE 1

SCALE 1:100

2.5 0 2.5 5

ALL DISTANCES ARE IN METRES

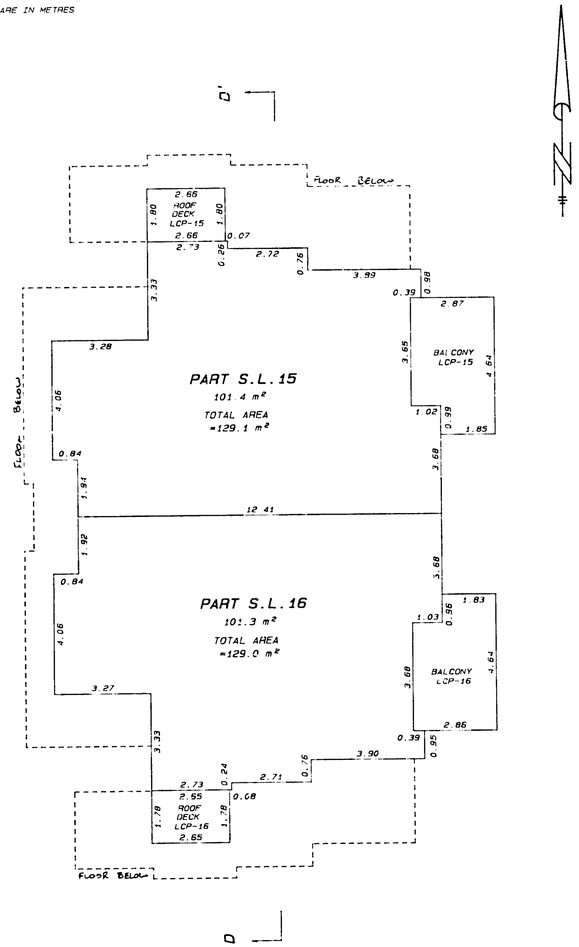

NOVEMBER 28TH, 2000.

SECTIONS

STRATA PLAN LMS_4358_

PHASE 1

SCALE 1:100

2.5 0 2.5 5

ALL DISTANCES ARE IN METRES

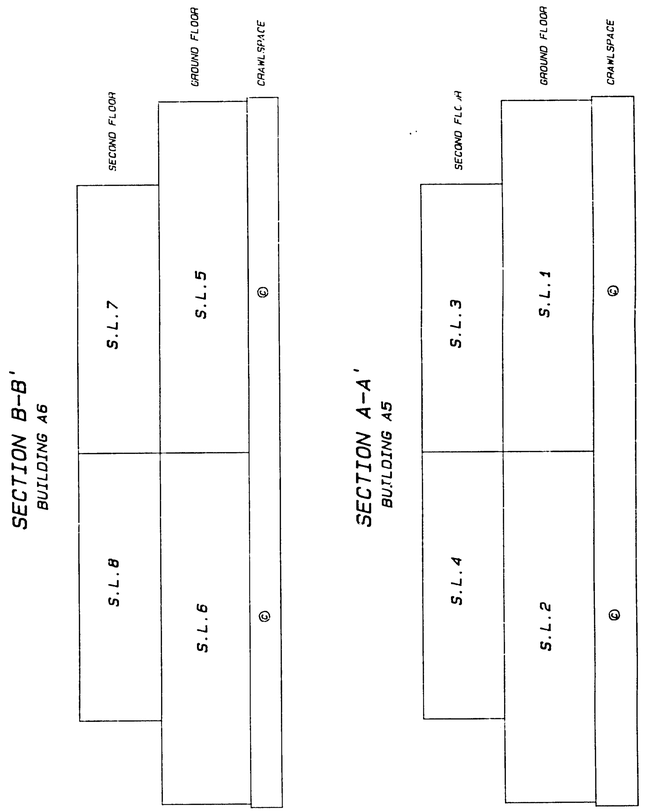

NOVEMBER 28TH, 2000.

SECTIONS

STRATA PLAN LMS_4358_

PHASE 1

SCALE 1: 100

2.5 0 2.5 5

ALL DISTANCES ARE IN METRES

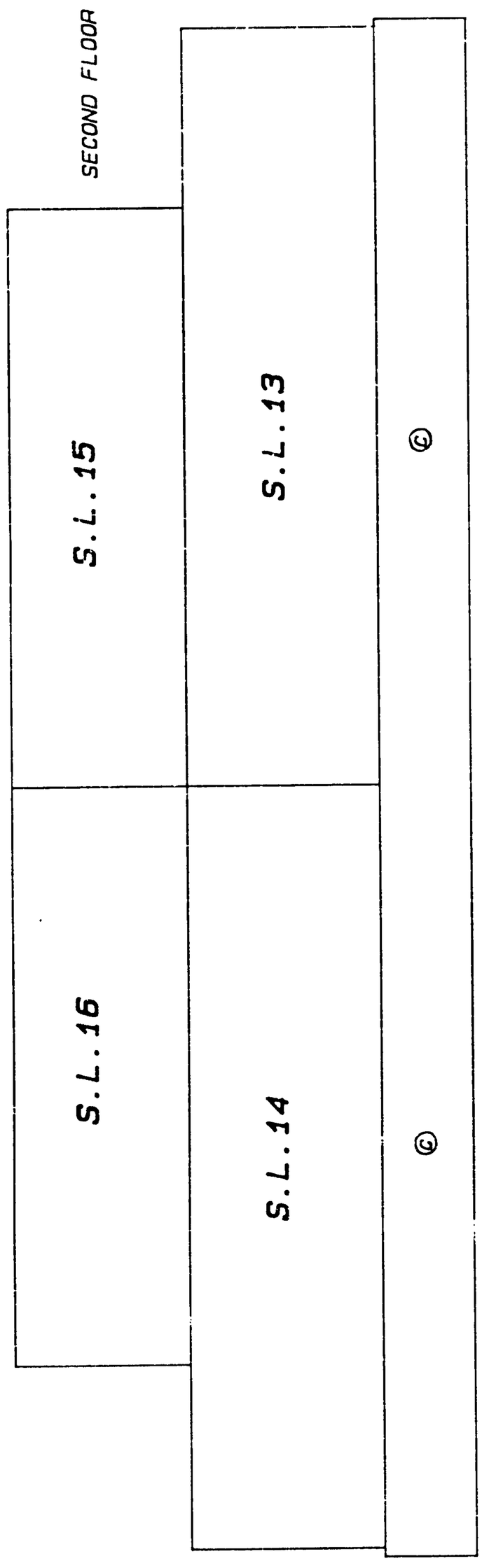

SECTION D-D'
BUILDING A11

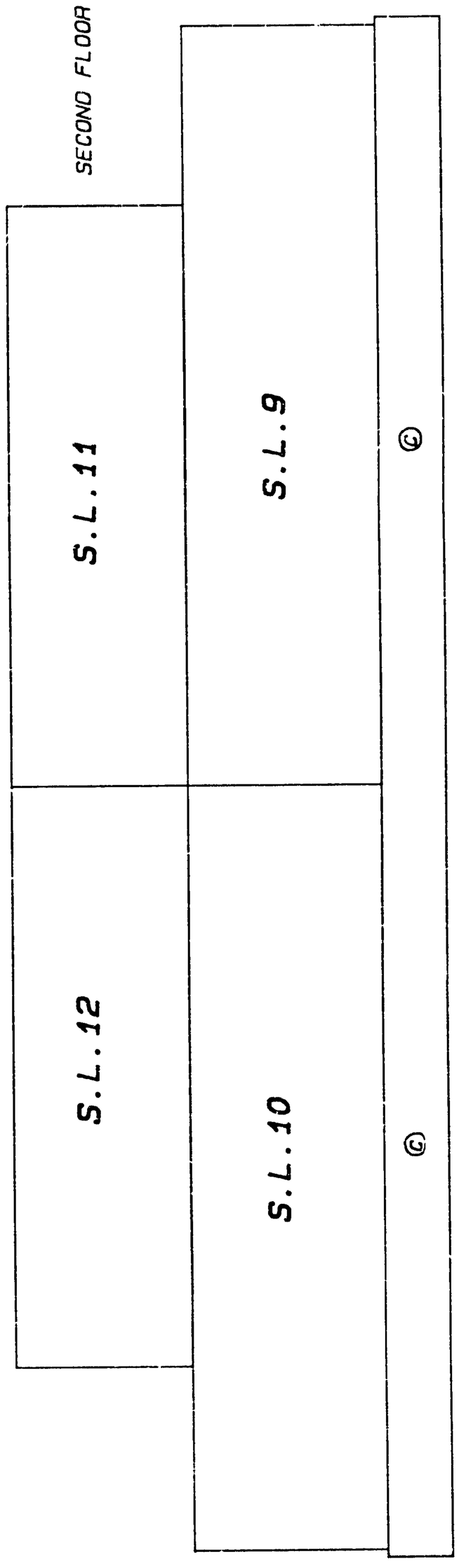

SECTION C-C'
BUILDING A12

NOVEMBER 28TH, 2000.